Installation guide

Vipp905
waste plug

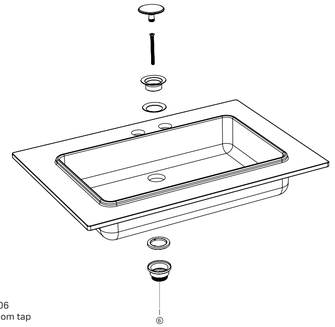

Vipp906
bathroom tap

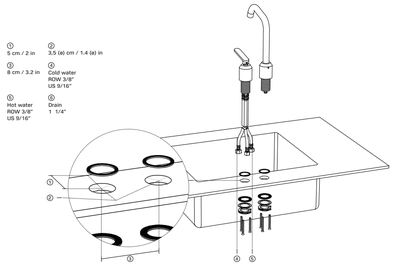

Drawer readjustment

Once your Vipp bath module is installed and the drawers are filled, a readjustment may be needed. Please follow the guidelines below for an easy readjustment of your bath module.

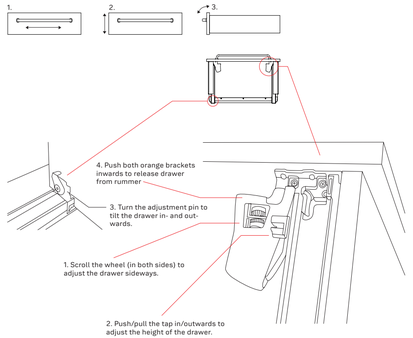

vipp

Vipp
Vipp981/982/983 bath modules

installation and care instructions

Congratulations
on your Vipp bath module

Vipp began making pedal bins in 1939. Since then, Vipp has grown into a wide range of products including kitchen modules, lighting and even a prefab home.

Whether designing a kitchen, a lamp, a prefab shelter, or a bath module, we measure the quality of our products on their long-term ability to provide better everyday experiences. Our ambition is to design useable products stripped of fading trends - products that will last you a lifetime, both functionally and aesthetically.

We hope you will enjoy your new bath module for many years to come.

Kasper Egelund
CEO of Vipp and grandson of founder Holger Nielsen

Product info

Materials	Powder-coated stainless steel/aluminium, surface in Cristalplant®, tap in solid, brushed stainless steel
Colour	White
Weight	Vipp981: 35 kg / 77 lbs
	Vipp982: 70 kg / 154 lbs
	Vipp983: 100 kg / 220 lbs

Product description
Made in powder-coated stainless steel, the bath modules feature details such as rubberplated drawer handles and a tabletop in Cristalplant® with integrated sink. The bath modules come with a water tap and waste plug in solid stainless steel. The modules are coated to withstand high levels of vapour and are easily mountable with the custom-designed bracket.

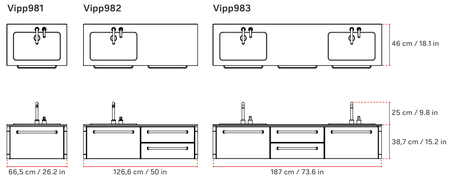

Care instructions

Cristalplant® tabletop
Most spills, residues, and stains can be removed by using a damp cloth with a mild cream cleanser or common household detergent. To deal with a persistent stain, use a plastic scouring pad to rub over the stain with a detergent or ammonia-based surface cleaner in circular motion. Make sure to clean the entire surface from time to time to avoid an uneven finish.
Do not use solvent agents like acetone or trichloroethylene as well as other aggressive chemical substances like muriatic acid or caustic soda. Neither use detergents for industrial use or others of unknown aggressive actions. When in doubt, test on a spot not in view before application.
Do not use very aggressive substance generally used to clear sink pipes or solvents used in the painting industry.

Frame and drawer fronts
Keep the surface of the bath module cabinet clean and dry. For cleaning, use a lint-free cloth or a soft brush with warm water and a mild detergent.

Tips for stains
Use alcohol or glass cleaner to remove grease stains. Then follow the guide for maintenance above.

Bathroom tap and waste plug
Keep the stainless steel tap clean and dry. Stainless steel may be permanently stained if water/fat/cleaning products are not removed relatively quickly. We recommend the use of a care product for stainless steel to make the surface water and dirt repellent. This makes the daily cleaning with a damp lint-free cleaning cloth much easier. Remember not to use chlorine/abrasive cleaners as this may damage the surface.

Vipp bath module
Installation guide

Please follow the installation guide to ensure correct installation. Vipp recommends you to use a certified installer to mount the bath module.

If you experience problems, please do not hesitate to contact our Customer Service at info@vipp.com.

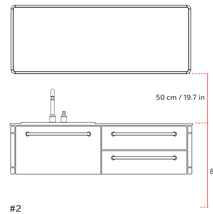

#1

1.0
Remove the back piece of the crate by unscrewing the black sticker-marked screws.

1.1
Attach the aluminium profile to the wall with either two, three or four screws depending on the model. Your installer will provide the correct screws for your wall. Make sure that each screw can carry at least 50 kg / 110 lbs vertically. The screws used must be flatheaded and countersunk to make sure the screws flush with the surface of the aluminium profile.

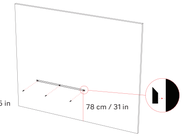

#2

2.0
Move the module in place by lifting the entire crate. The module must interlock with the profile mounted on the wall. Then remove the crate from the module.

2.1
Lift the module in the two beams.

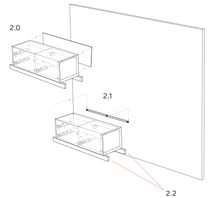

#3

3.0
Secure the module by fastening two screws and two washers in the angular brackets inside the cabinets.

3.1
Remove the drawers, once the module is hung on the brackets. See the back side of this folder or search for 'MOVENTO adjustment video' on www.youtube.com

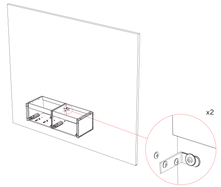

#4

Remove the cover tape of the adhesive sticky dots and place the tabletop flush to the front and sides.

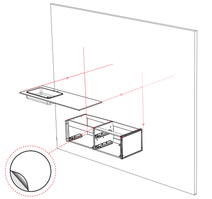

#5

Mount the tap(s) as illustrated. Make sure the brass ring is tightened hard, and the three allen screws are used for each brass ring.

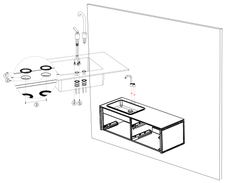

#6

6.0
Place the drawers in the rollers and adjust the position. For help, see the back side of this folder or search for 'MOVENTO adjustment video' on www.youtube.com

6.1
Should you need to adjust your drawers at a later point in time, please use the same procedure as described above.

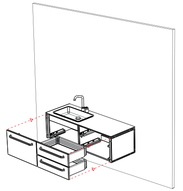

#7
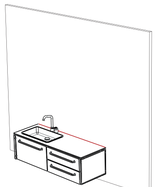
Apply a white silicone sealant between the back side of the tabletop and the wall. Connect the water supply and drainage. Vipp recommends you to use certified installer for both jobs.